SF0P9–02
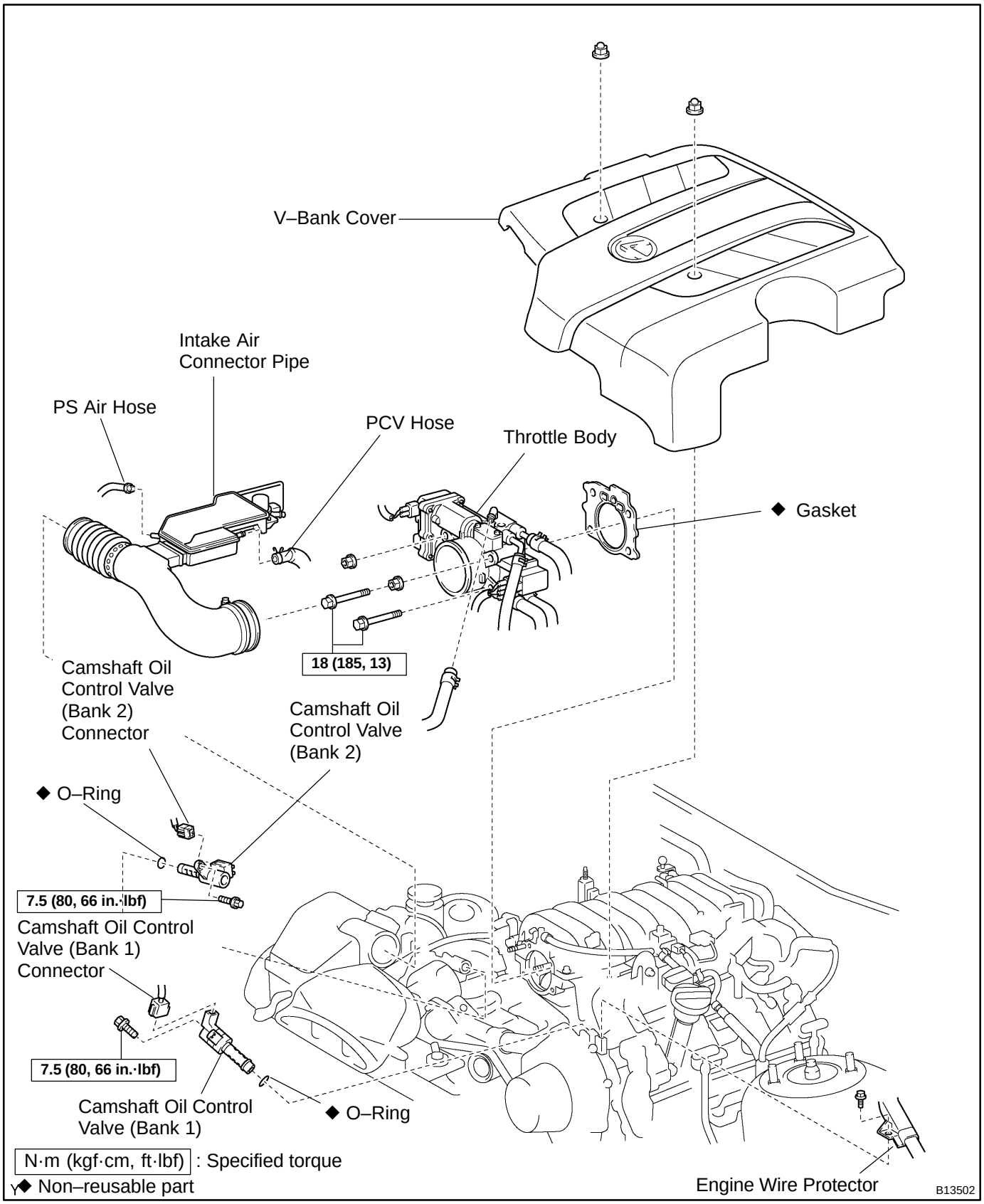
COMPONENTS